NEW	REVISIONS			
7-8-88	1-11-90	11-22-93	2-2-98	7-31-07

ST. LOUIS COUNTY PROJ.		
	SHEET NUMBER	TOTAL SHEETS

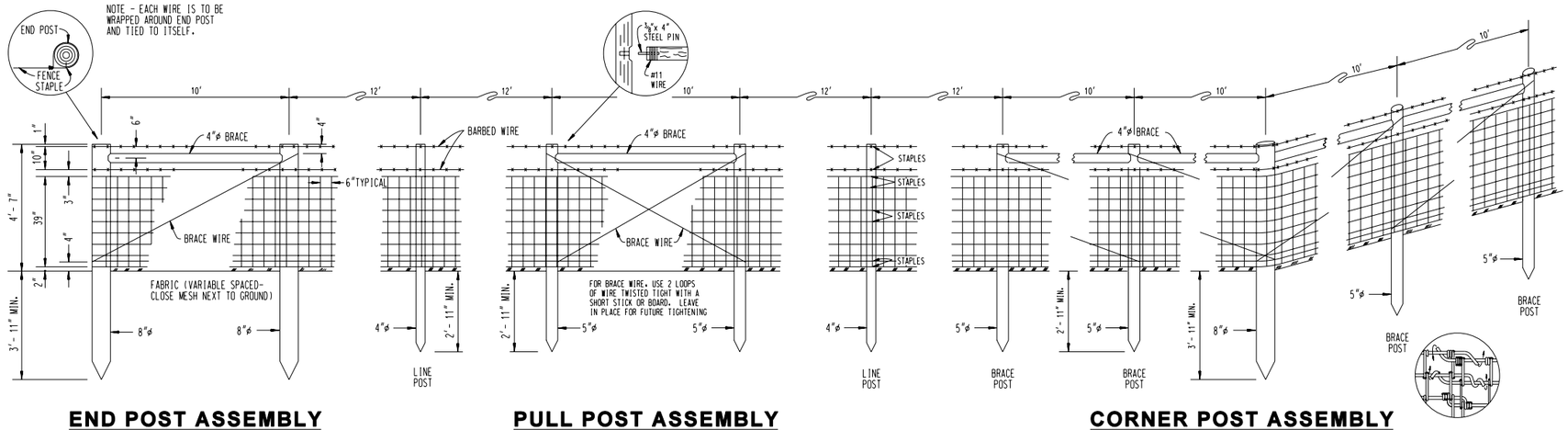

END POST ASSEMBLY

PULL POST ASSEMBLY

CORNER POST ASSEMBLY

WOOD POST

GENERAL NOTES

1. Do not scale drawing. Follow dimensions.
2. Steel Line Posts shall be of an approved "U", "Y", "T", or channel section, notched or studded, with an anchor plate. Post punched with holes or self fastening lugs will not be permitted.
3. Staples shall be screw shank type or equivalent (1-1/4" min. length).
4. Stretch fabric and barbed wire on outside of posts on corners and curves.
5. Fence style (design number) shall be 939-6-11, AASHTO W279.
6. Attachment of fabric to steel line posts in accordance with manufacturer's recommendation.
7. Gates for woven wire fence shall be in accordance with Section 607.20 and Section 1043.2.6 of the Standard Specifications. Except the filler shall be woven wire fabric of the same kind as used for the fence.
8. Single leaf gates required up to 12'- 0" opening. Double leaf gates required over 12'- 0" opening. Direction of swing of gates shall be indicated on the plans or as directed by the Engineer.
9. The details shown are adapted from the Missouri Department of Transportation Standard Drawings.

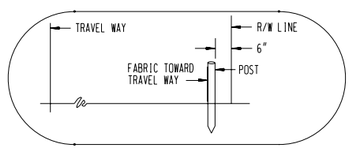

TYPICAL FENCE LOCATION

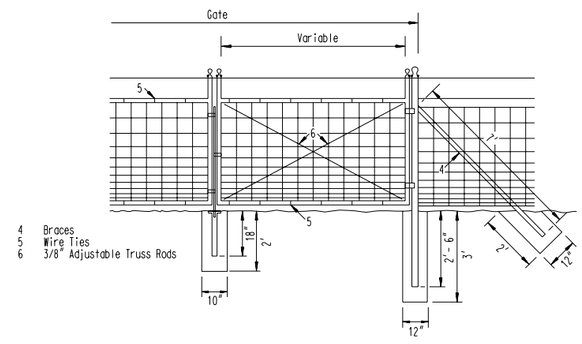

GATE OPENING	GATE POST SIZE	#/FT.
6' & LESS	2"Ø	3.65
13' & LESS	2-1/2"Ø	5.79
18' & LESS	3-1/2"Ø	9.10
OVER 18'	6"Ø	18.97
GATE FRAME	1-1/2"Ø	2.72

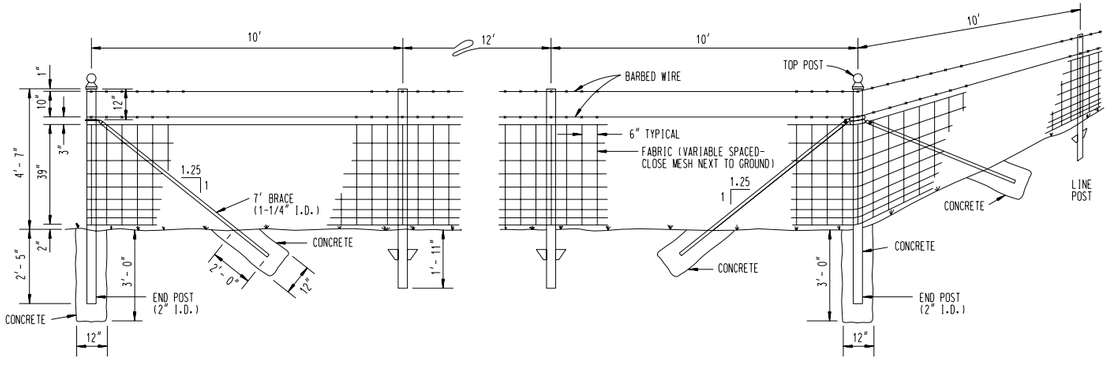

END POST ASSEMBLY

LINE POST

CORNER OR PULL POST ASSEMBLY

STEEL POST

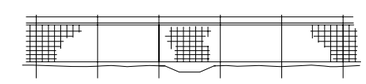

ROADWAY DITCHES OR SMALL SHALLOW CHANNELS (SPAN WITH NORMAL LINE POSTS SPACING)DL

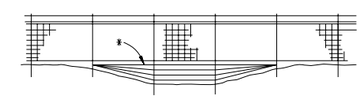

POORLY DEFINED CHANNELS (SMALL DRAINAGE AREAS)

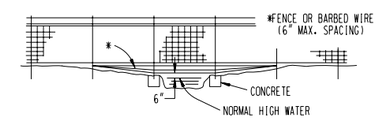

WELL DEFINED CHANNELS (LARGE DRAINAGE AREAS)

TYPICAL FENCING AT CHANNEL CROSSINGS

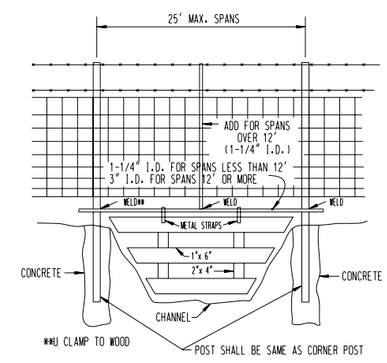

TYPICAL WATER CROSSING GATE

SAINT LOUIS COUNTY
DEPARTMENT OF HIGHWAYS AND TRAFFIC
CLAYTON, MISSOURI

WOVEN WIRE FENCE

REVISION DATE: July 31, 2007

DRAWING
C607.20